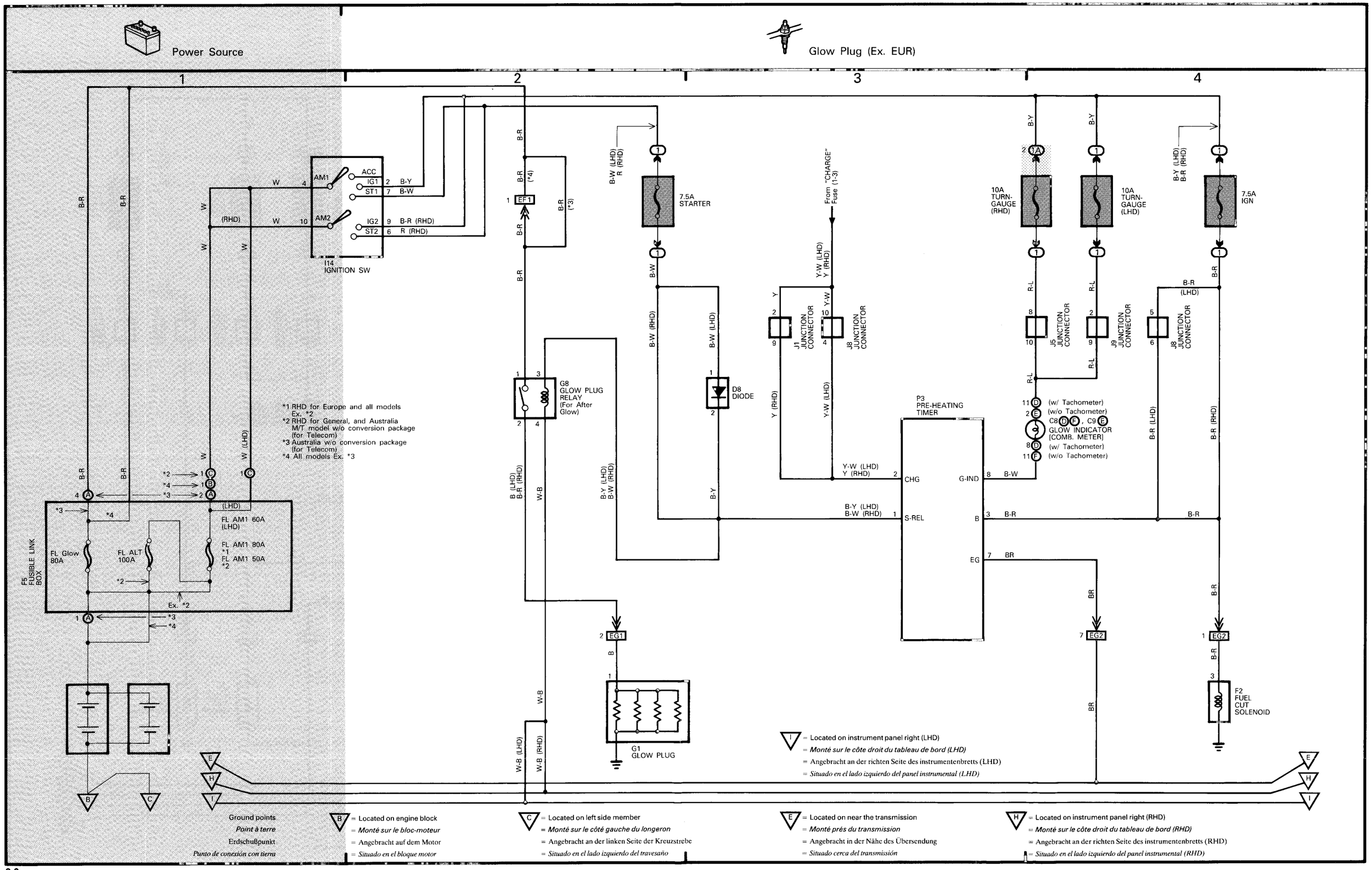F ELECTRICAL WIRING DIAGRAM (SYSTEM CIRCUITS) 4